FREE TO AIR

Model : AF-8110EC(1500,1700)

Revision:3.1

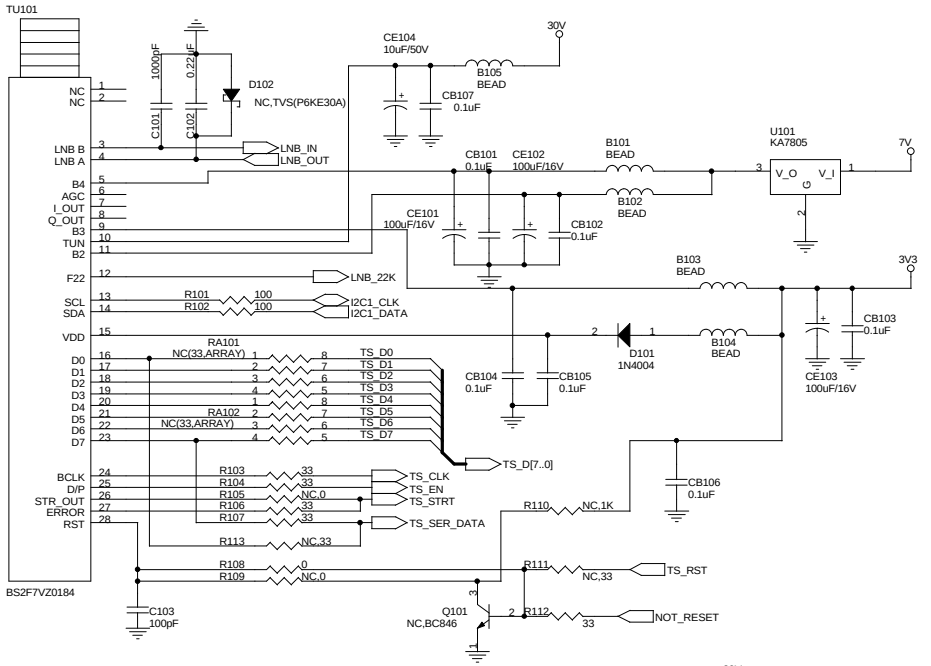

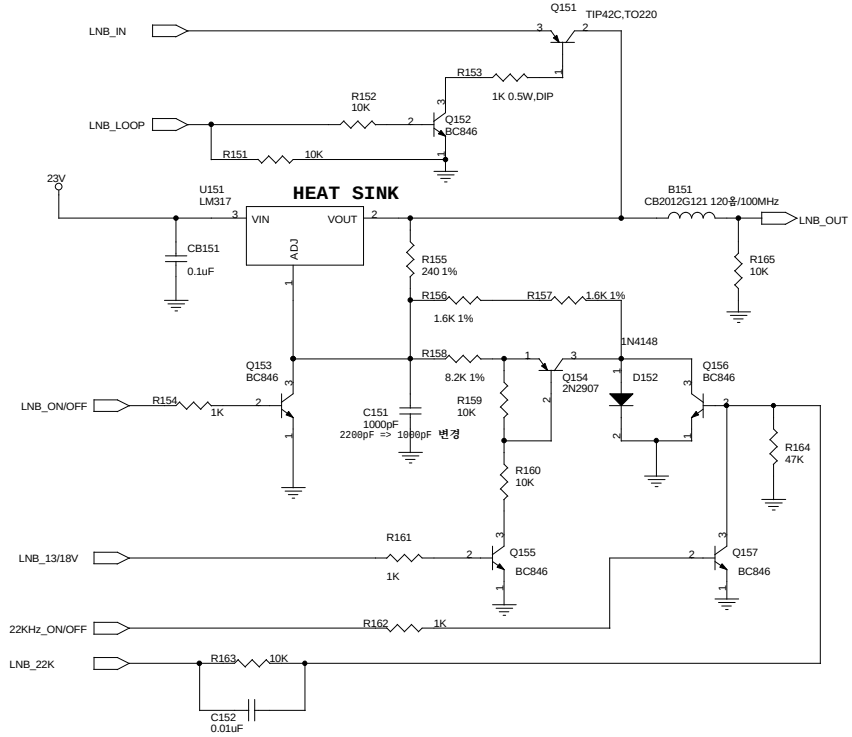

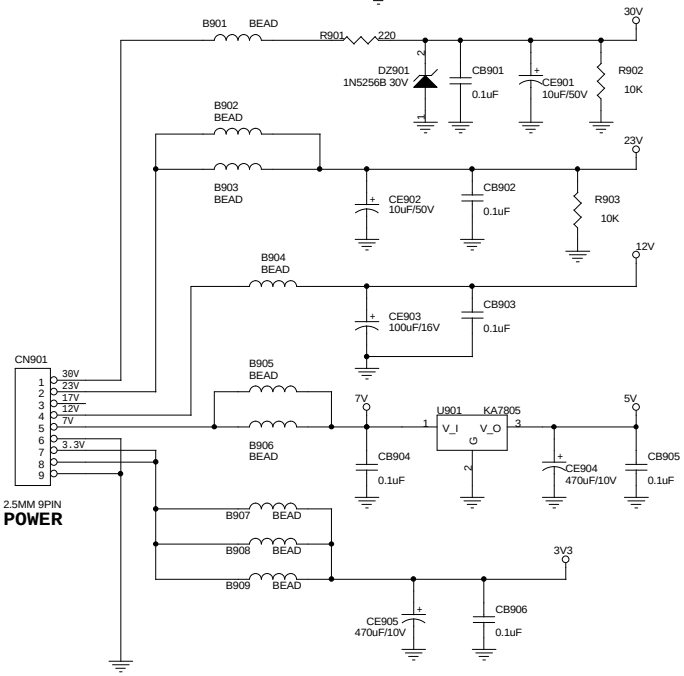

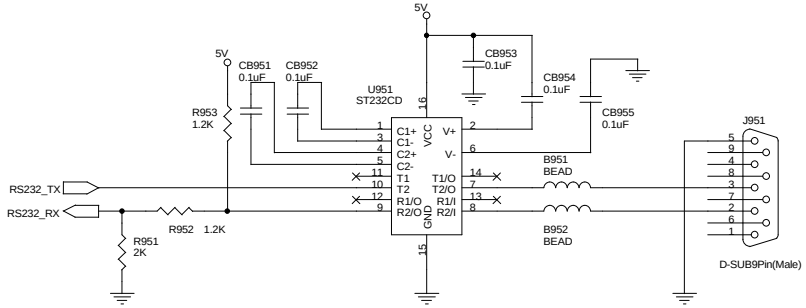

Arion Technology Inc.

Title: **AF-8110EC_MAIN**

Size	Document Number	Rev
Custom	01-TUNER & POWER&LNB&RS232	3.1

Date: Wednesday, October 22, 2003 Sheet 1 of 6

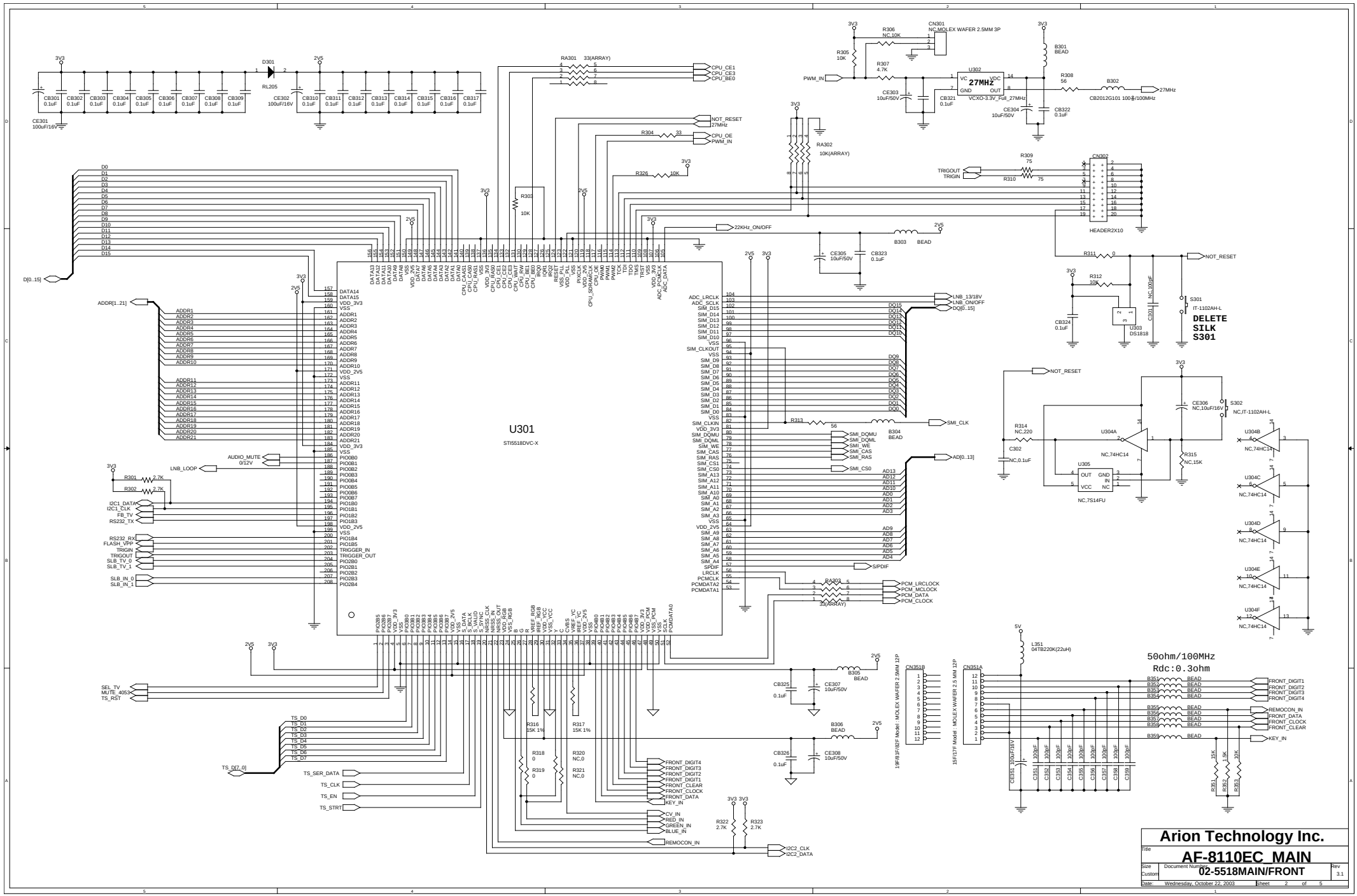
U301
STI5518DVC-X
DELETE SILK S301
50ohm/100MHz
Rdc:0.3ohm
Arion Technology Inc.
AF-8110EC_MAIN
02-5518MAIN/FRONT
Size Custom
Document Number
Rev 3.1
Date: Wednesday, October 22, 2003
Sheet 2 of 5

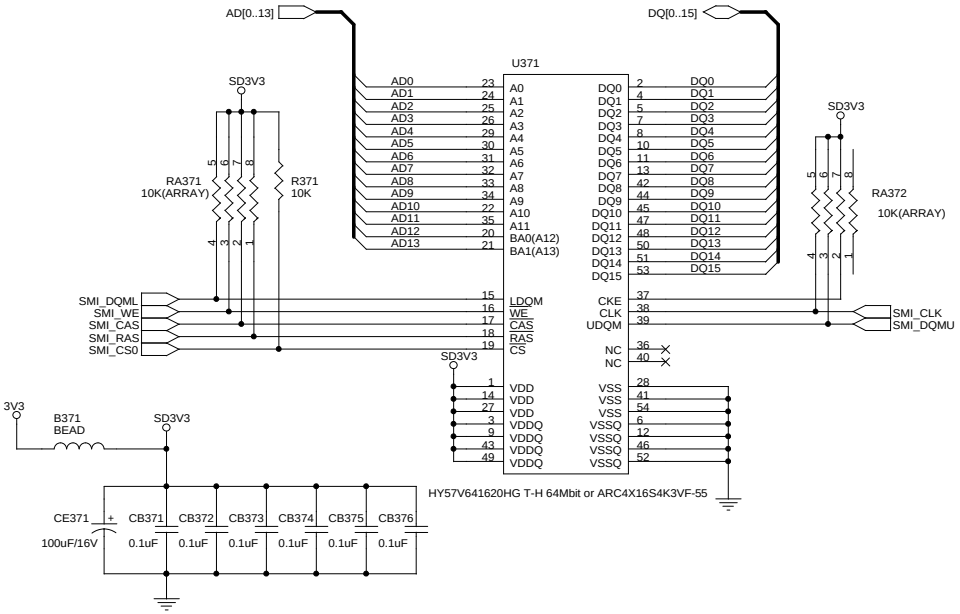

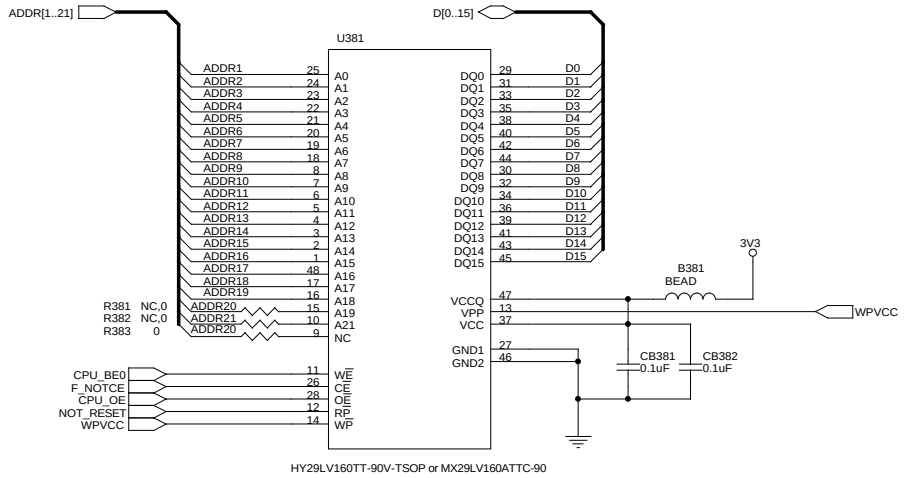

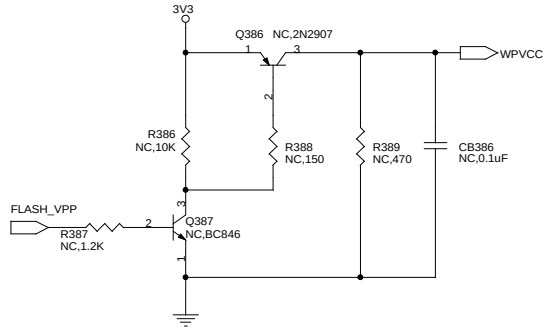

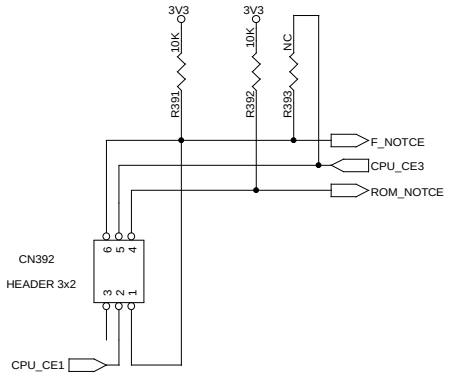

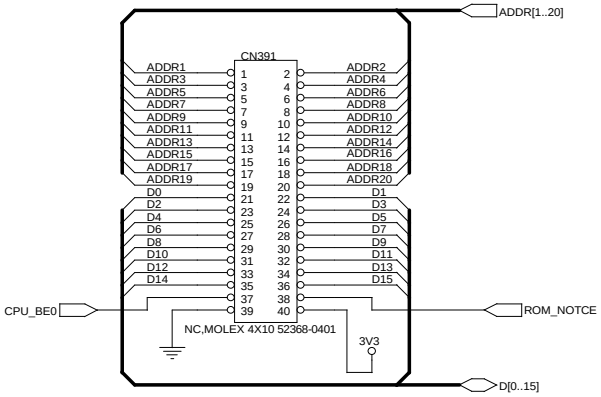

Arion Technology Inc.		
Title: AF-8110EC_MIAN		
Size: A3	Document Number: 03-MEMORY(SDRAM&FLASH)	Rev: 3.1
Date: Wednesday, October 22, 2003	Sheet 3 of 5	

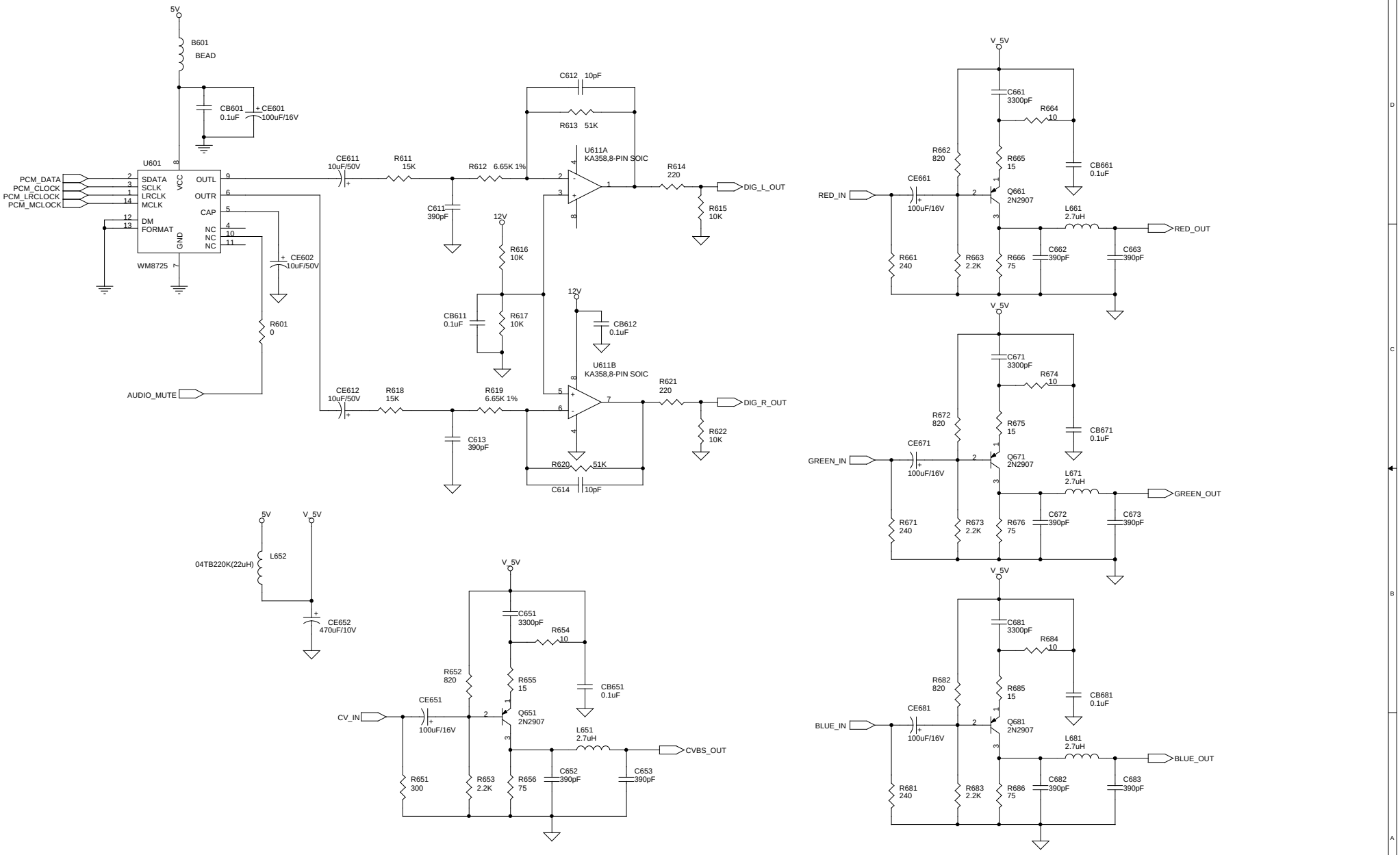

Arion Technology Inc.		
Title: AF-8110EC_MIAN		
Size: Custom	Document Number: 04-AUDIO/CVBS/R/G/B	Rev: 3.1
Date: Wednesday, October 22, 2003	Sheet 4 of 5	

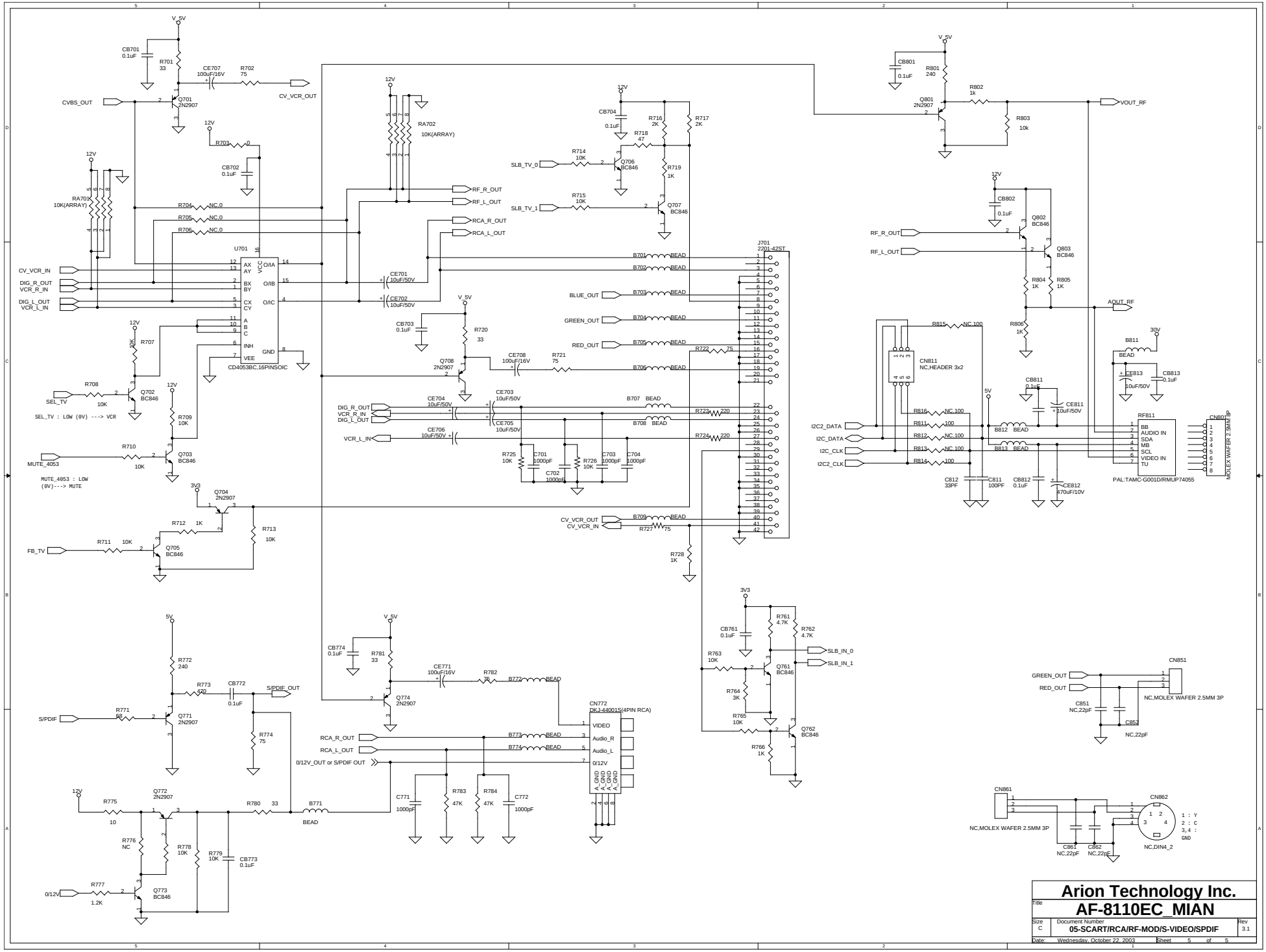

Arion Technology Inc.

Title: **AF-8110EC_MIAN**

Size	Document Number	Rev
C	05-SCART/RCA/RF-MOD/S-VIDEO/SPDIF	3.1

Date: Wednesday, October 22, 2003 Sheet 5 of 5